GE
Critical Power

Zenith™ STS-1 & STS-3 Series Static Transfer Switches

Seamless Input Source Transfers for Sensitive Critical Loads.

Touching all Areas of the Energy Industry

GE's diverse portfolio of products and services is helping customers solve problems every day. We touch all areas of the energy industry including energy management, smart grid modernization, coal, oil, gas, nuclear energy, water, wind, solar and biogas.

Providing Reliable Power to your Mission-Critical Business Needs

With a comprehensive energy management portfolio, GE is uniquely qualified to provide comprehensive datacenter, commercial and industrial infrastructure solutions from its' Industrial Solutions and Critical Power businesses. Due to the inherent high-efficiencies offered with GE electrical distribution equipment and GE UPS systems, measurement of PUE can be maximized by the integrated use of these solutions.

Numerous critical power products and services can be utilized to deliver reliable datacenter infrastructure support, solid project management and outstanding site service solutions.

Over 15,000 downloadable resources for our customers

GEIndustrial.com/CriticalPower provides customers with access to the latest product and solutions news, downloadable resources and interactive digital tools.

- Access to the entire portfolio of product solutions:
  - Brochures
  - Manuals
  - Software
  - Drawings
  - Videos
- Multi-language support in Chinese and Spanish
- Industry solution offerings & advanced navigation

End-to-End GE Solutions for Datacenter Power Needs

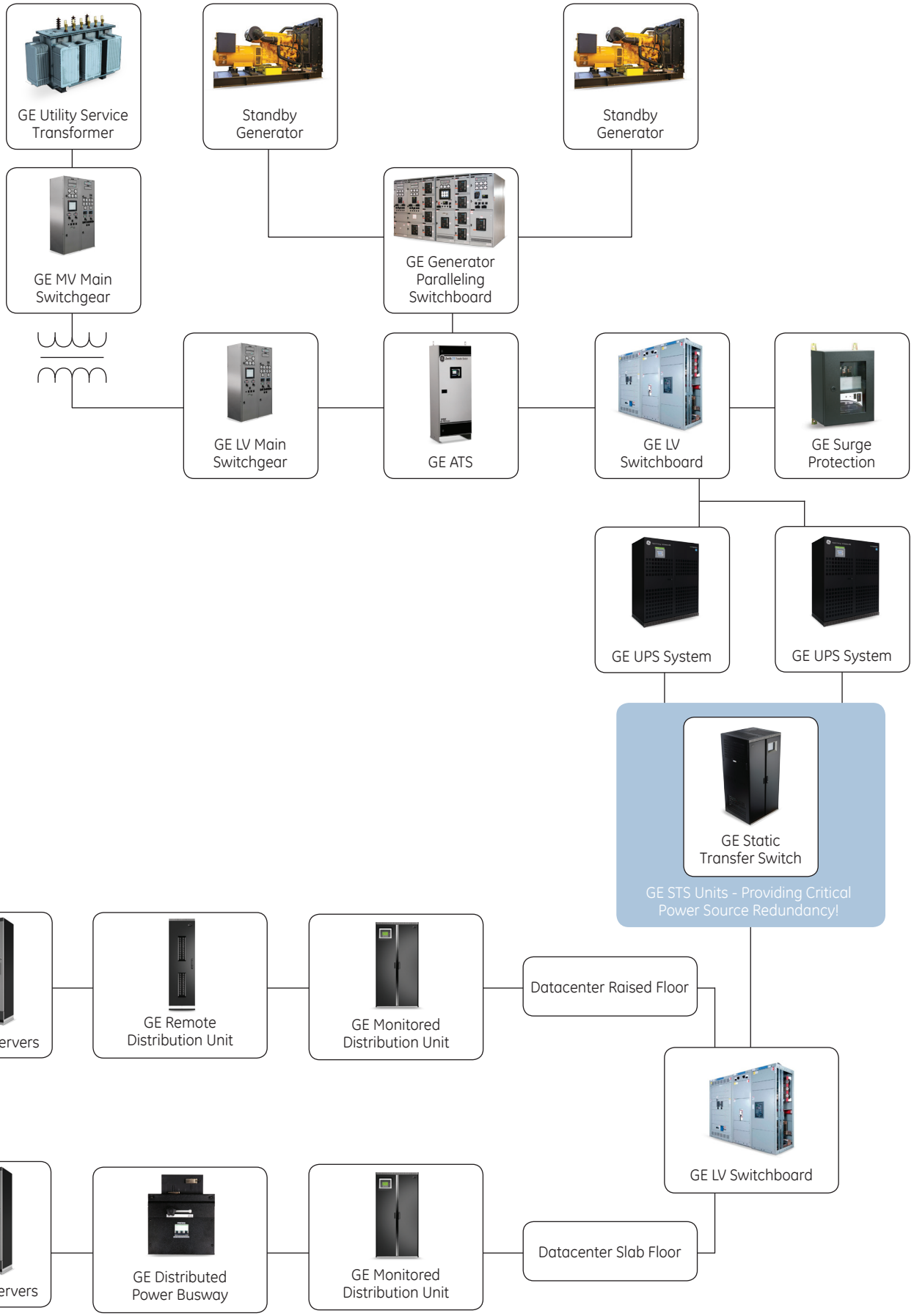

Zenith STS-3 Series; Three Phase Static Transfer Switch
Seamless Input Source Transfers for Critical Loads

Fully Automatic, Transparent Dual-Source Switching

GE Critical Power is a key supplier of static transfer switches to a wide range of industries. The STS-3 communication package adds to this preference as it incorporates all of the features that the data center manager wants in one compact package. The GE static transfer switch supplies critical loads with a choice between two available sources of electrical power. By continually monitoring power quality, the STS-3 switch automatically transfers to an alternate source without interruption of power to even your most sensitive critical loads. With a sense and transfer time of less than 4ms and he industry's best communication package, the GE STS-3 represents the highest performance power switching solution available.

The STS-3 communication package enhances the overall reliability and availability of power to your facility by:

- Providing instantaneous access to redundant sources of power
- Enabling on-line maintenance of upstream equipment
- Showing real time wave form captures on the LED screen
- Preventing cross connection of sources during transfer and eliminating the possibility of cross current between sources.
- Redundant power supplied and operator interface panel

True System Redundancy

Component Redundancy Redundant operator interface module, power supplies, control power circuits and sensors.

Logic Redundancy Redundant voltage detection systems, voltage sensing/sampling systems and independent redundant logic with two different logic algorithms.

System Redundancy Redundant static transfer mode power path, bypass power path and optional dual isolation switches.

Standard Tri-Redundant System The ultimate in power system reliability

The GE Difference

Packaging Flexibility Configurable as part of GE's MDU/RDU Series of Power Distribution Systems.

Rigorous Product Testing Fully rated switching elements are tested at 6000 operations at 150% load and 50 operations at 600% load. This testing is backed by GE Critical Power Quality Assurance Program.

Modular Design Modular design results in higher quality throughout the line and delivery schedule ready to meet the most demanding timelines.

STS-3 Technical Data & Features

Ratings

- 150, 250, 400, 600, 800, 1000, 1200, 1600 Amp
- 208, 415, 480, 600 VAC, 3phase 3 wire
- Switching neutral option
- (5) or (6) Non-auto circuit breakers
- 500% overload for 10 sec
- MTBF exceeds 2,000,000 hours
- 22 KAIC (65 and 100 KAIC optional)

Redundancy

- Fail safe dual redundant display
- Triple redundant logic
- Triple redundant power supplies
- Dual redundant gate drivers for SCRs- two gate drivers for each SCR

Logic

- Volt second synchronization (VSS) limits downstream transformer inrush on
  480 volt systems during: Initial stat up, restarts and transfers
- VSS start-up, restart or transfer limits to 1.5 times in-rush up to 180 degrees out of phase
- Dynamic transfer delay for use with UPS systems that have ecomode operation

Communications Package

- Web enabled through Web Browser
- SNMP port
- Modbus RTU through RS 422/485 port
- USB port for downloading stored data - event recapture

Security

- Layered security through log on access
- User logon ID and PIn number required for STS operation
- All log ins are time and date stamped for future reference
- Event/alarm memory is 2MB

Certifications

- ETL listed to UL 1008 standards

Physical Data

AMP RATING	HEIGHT	WIDTH	DEPTH	WEIGHT (LBS)
150-600	74.75”	36.50”	32.75”	900
800	74.75”	48.00”	32.75”	1,100
1000	86.25”	53.25”	36.00”	2,800
1200	74.75”	84.00”	43.00”	3,600
1600	74.75”	89.25”	43.00”	3,600

More STS-3 Features

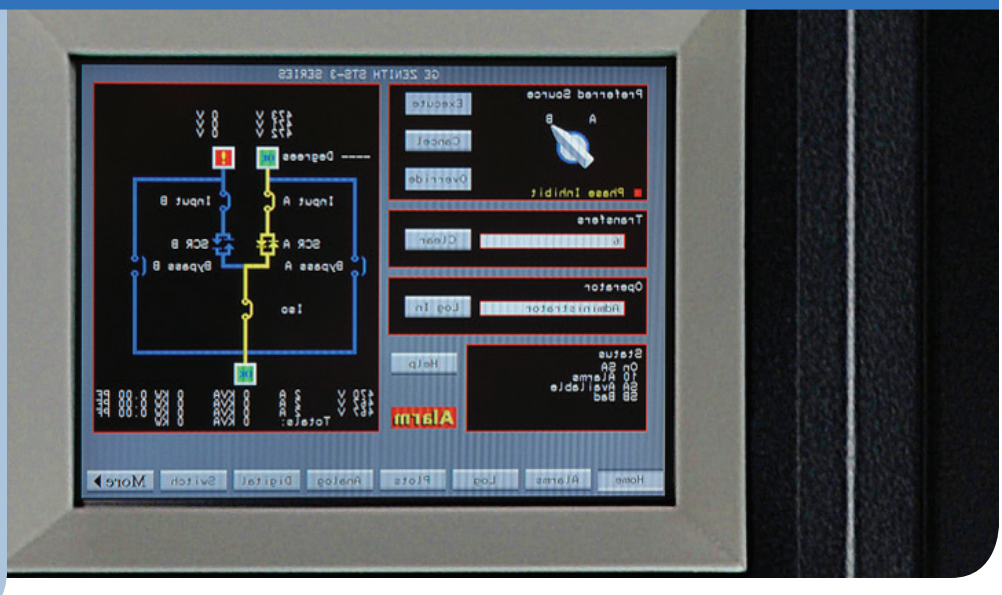

Graphical User Interface

- Fully functional touch screen, 262k color
- 10.4"x10.4" LCD touch screen, 640x480 resolution
- Redundant fail safe analog control panel

Installation and Maintenance

- "Hot Swap" capability for Printed Circuit Boards (PCB)
  - Optical Bus allows for replacement of PCB while STS is powered and connected to the load
- "Hot Swap" capability for touch screen Graphical User Interface (GUI)
  - By engaging the Redundant Analog Control Panel, the GUI may be replaced without interrupting power
- Front access only required for I/R scans of all terminations
- SCR module is on draw-out slides for ease of service
  - Logic module is on draw-out slides for ease of service and greater access for I/R scans

Monitoring

- Fail safe dual redundant display)
- All status, events and alarm logs may be viewed via Web Browsers (STS may NOT be operated via Internet)
- Events will record up to 10 seconds after loss power
- "Real Time" capture of wave forms
- Branch circuit monitoring systems graphing available
- Graphic depiction of voltage and current harmonic trends
- All STS stored data is captured and available at the Switch

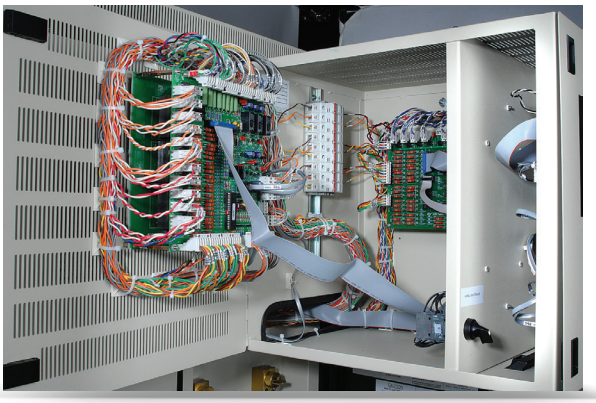

STS-3 Available Systems

Stand-Alone System

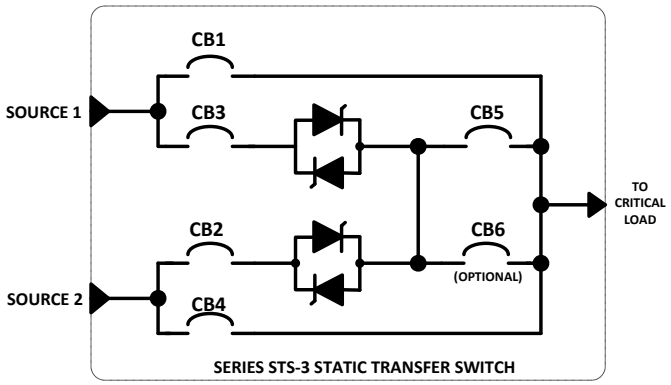

Primary Redundant STS-3/MDU System

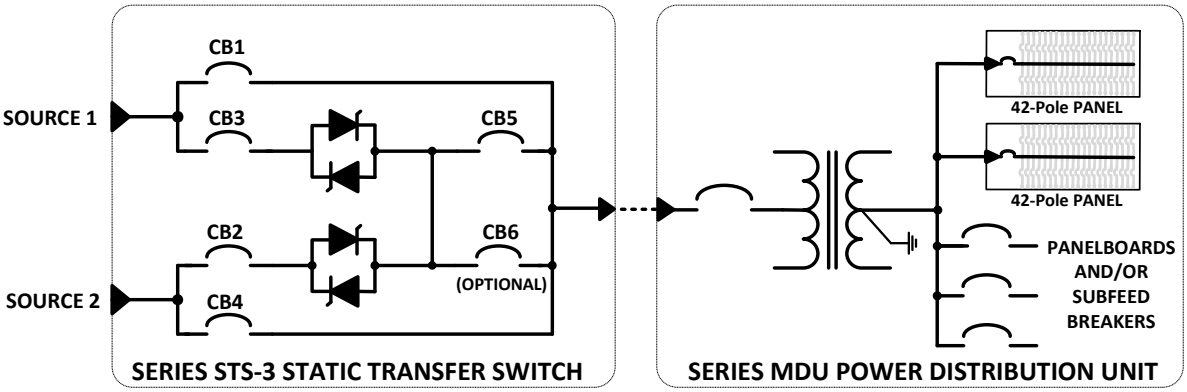

Both STS unit and MDU unit are in matching cabinetry for a complete system solution

Zenith STS-1 Series; Single Phase Static Transfer Switch
Seamless Input Source Transfers, Rack-Mounted

Product Introduction

GE provides this high speed transfer system for applications where at least two sources of power are available. Called the Zenith STS-1 Series, it is capable of providing coordinated transfer of critical loads between power sources regardless of phase relationship. SCR (Silicon Controlled Rectifer) technology is utilized to ensure that essential equipment power is maintained by transferring loads to an Alternate source in the event of Preferred source failure. Break-before-make switching eliminates concerns of inter-phase shorting, so source synchronization is never required. The STS-1 makes no distinction between synchronous or asynchronous transfer, so unpredictable conditions related to source faults or varying phase shifts from non-utility sources never inhabit transfer. The STS-1 is not subject to the possibility of inhibited transfer due to the sources being out of phase, nor is it generally subject to problems associated with transients, arcing, or harmonics.

Applications

Recommended applications for the Series STS-1 include:

- Cogeneration facilities
- Communication centers
- Asynchronous power source transfers
- Continuous emissions monitoring systems
- Medical life support and emergency facilities
- Data processing and computer installations
- Test, measurement and calibration facilities
- Critical control processes

Product Description

The series STS-1 incorporates the proven technology of SCR switching with fast acting solid state electronic sensing. Integrated of the SCR components is checked on every transfer to verify the functionality of the switch. In the event off a total power loss, the STS-I transfer time averages 6 milliseconds. Transfer time is simply defined as the average time the load may experience an absent voltage condition. The STS-1 transfer time falls well within the “acceptable zone” for transfer time as stated by the Computer Business Equipment Manufacturer’s Association (CBEMA). All STS-1 units are ETL listed, which qualifies them for both new installations and retrofit projects.

Computer/IT Applications

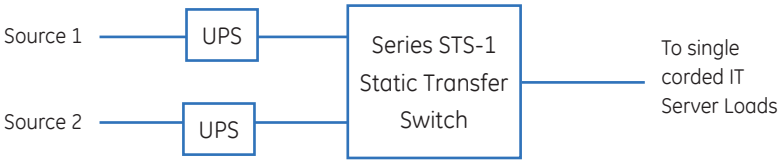

Critical Process Applications

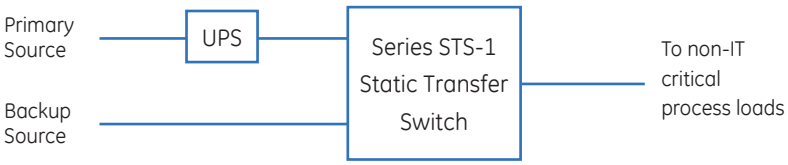

Front Panel Display

STS-1
Features, Benefits, Application Data

Features

- Automatically transfers from a Preferred to an Alternate A.C source in the event of Preferred source failure, regardless of phase relationships. No synchronization required.
- Automatically transfers back from the Alternate source when the Preferred source voltage is greater that Power Fail Threshold. Incorporates Transfer Back Delay to avoid nuisance transfers on unstable voltage.
- Source Default Select: This option enables manual selection to determine which source the switch will normally run on if both sources are present.
- Solid state switches (SCR's) are connected in bridge configuration, effectively doubling their voltage rating. SCR's switch without arcing, voltage, transients or significant current surges.
- LEDs are provided to indicate source and transfer logic status. Integral relays reflect same via isolated form c contacts terminated for remote indication.
- No Load Transfer Inhibit: Self-monitoring feature that prevents unsequenced transfers if the load-sensing interlock is not maintained.
- Transient and Noise Protection: Surge suppressors installed across AC inputs and RFI filtered redundant logic power supplies
- Manual Transfer is provided on all models.

Application Sizing

MODEL #	AMPS	KVA	RACK SIZE	PHYSICALS
120VAC, 1phase, 60Hz				
STS1-112025	25	3.0	2U	3.5"hi x 19"w x 32.5"dp, 35 lbs
STS1-112045	45	5.4	2U	3.5"hi x 19"w x 32.5"dp, 35 lbs
STS1-112065	65	7.8	2U	3.5"hi x 19"w x 32.5"dp, 35 lbs
STS1-112085	85	10.2	2U	3.5"hi x 19"w x 32.5"dp, 35 lbs
240VAC, 1phase, 60HZ				
STS1-124025	25	6.0	2U	3.5"hi x 19"w x 32.5"dp, 35 lbs
STS1-124045	45	10.8	2U	3.5"hi x 19"w x 32.5"dp, 35 lbs
STS1-124065	65	15.6	2U	3.5"hi x 19"w x 32.5"dp, 35 lbs
STS1-124085	85	20.4	2U	3.5"hi x 19"w x 32.5"dp, 35 lbs
220VAC, 1phase, 50HZ				
STS1-122025	25	5.5	2U	3.5"hi x 19"w x 32.5"dp, 35 lbs
STS1-122045	45	9.9	2U	3.5"hi x 19"w x 32.5"dp, 35 lbs
STS1-122065	65	14.3	2U	3.5"hi x 19"w x 32.5"dp, 35 lbs
STS1-122085	85	18.7	2U	3.5"hi x 19"w x 32.5"dp, 35 lbs

Benefits

- Automatically senses power degradation or failure of the preferred source and initiates a transfer to an alternate source
- Transfers load between the preferred and alternate sources regardless of phase relationship
- Restores voltage fast enough to perform a seamless transfer while preventing load malfunction
- Performs transfer efficiently without causing arcing, contact, bounce, or abnormal current transients
- Virtually eliminates contact wear and maintenance
- Connects electrical loads to virtually an existing AC sine wave source

Customer Service Support

Toll-Free: +1 800 637 1738

US-Based Customer Service

Answered Live 24/7

US-BASED
CUSTOMER SERVICE

GE Critical Power... Servicing you infrastructure Investments... ATS, UPS, STS, PDU's, and other Electrical Distribution Equipment

GE's Services offerings range far beyond standard product support: from on-site services for risk-reducing installation and startup, to availability services to help you proactively reduce downtime and meet your service-level commitments. From installation to product retirement, warranty upgrades to remote monitoring, proactive care to 24/7 problem resolution, you can rely on GE's field service organization for all your electrical infrastructure support needs.

On-Site & Emergency Services

- 24/7 Emergency Hotline

Spare Parts

- Spare Part Kits
- Product Replacement / Return
- Equipment Rentals
- Parts Replacement

Contractual Services

- Maintenance Service Contracts
- Remote Monitoring & Diagnostics
- Technical Services

Training

- Training for Operators
- Training for Maintenance Staff
- Product Training
- Web-Based Training

Factory Testing & Customer Witness Testing

Factory Testing can include, but is not limited to:

- STS functional tests
- UPS functional tests
- UPS/STS integration testing
- Testing to standard GE test scripts
- Testing to custom project test scripts
- Full testing documentation/results

Field Testing & Service Capabilities

- STS Testing
- UPS System Testing
- Load Bank Testing
- Thermography Testing
- Project Management
- Site Commissioning Assistance
- Repair, Upgrade, Retrofit
- Site Audits & Assessments

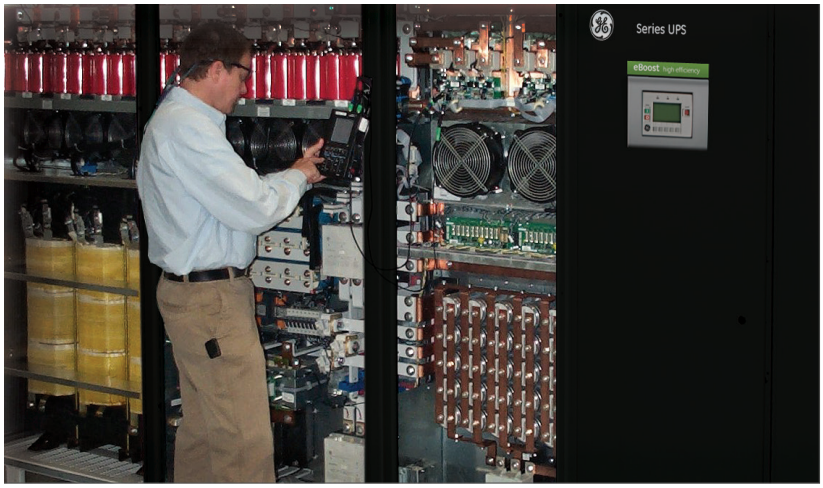

ISO 9001
CERTIFIED

imagination at work

GE
Critical Power

601 Shiloh Road, Plano, TX 75074
Customer Service Support
Toll-Free: +1 800 637 1738
US-Based Customer Service
Answered Live 24/7
www.gecriticalpower.com

English
DEA-587 Rev. 03/14

*Trademark of General Electric Company. Copyright 2014 General Electric Company. All Rights Reserved.

© 2014 General Electric Company. GE, the GE Monogram, imagination at work, Zenith and all other trademarks, registered trademarks and service marks, unless otherwise noted, are owned or licensed by the General Electric Company or its subsidiaries. The contents of this document are the property of General Electric Company. No part of this work may be reproduced or transmitted in any form or by any means, except as permitted in written license agreement with General Electric Company. The information contained in this document is subject to change without notice.